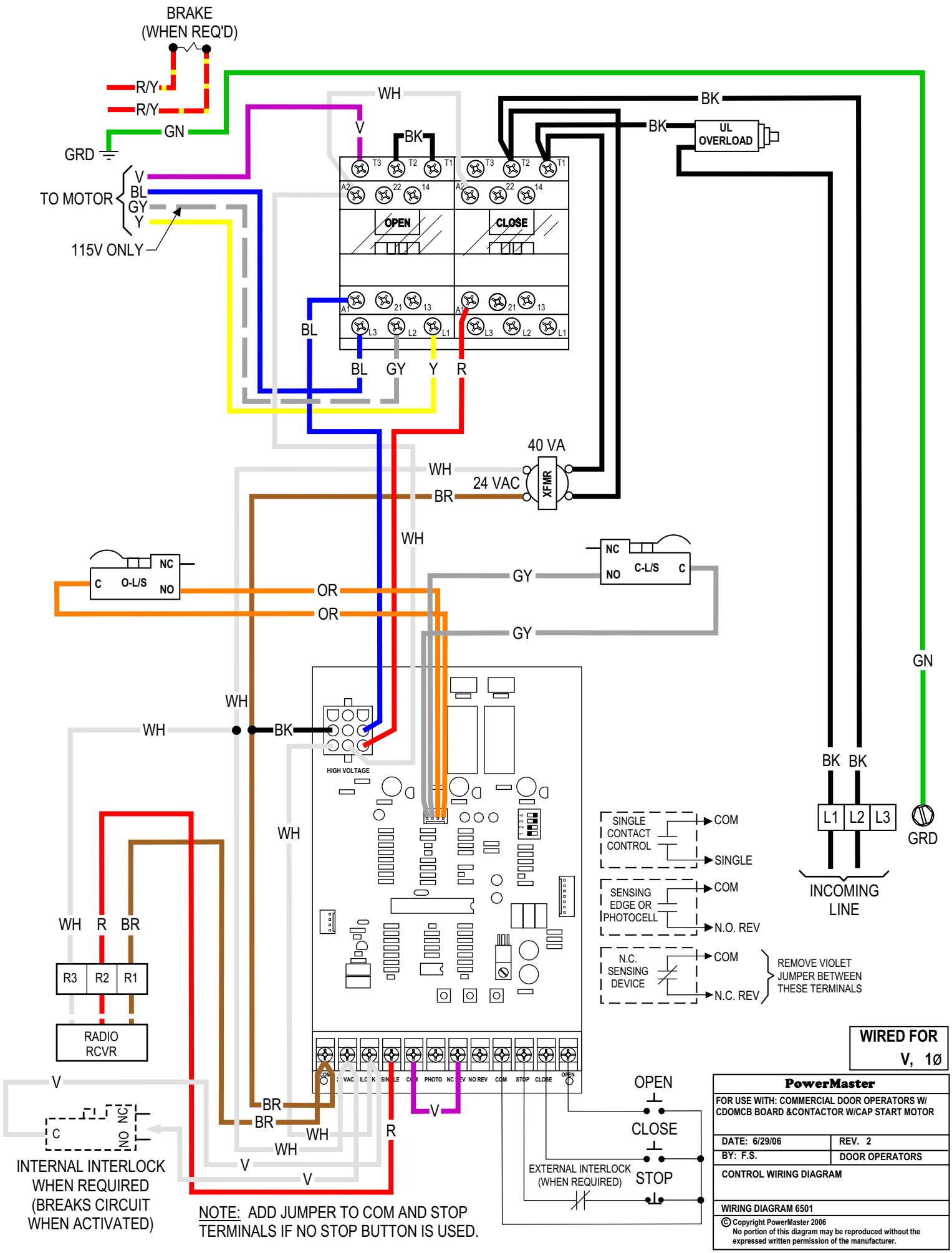
BRAKE
(WHEN REQ'D)
R/Y
R/Y
GN
GRD
TO MOTOR
V
BL
GY
Y
115V ONLY
WH
V
BK
BK
BK
UL
OVERLOAD
T3
T2
T1
A2
22
14
OPEN
CLOSE
A1
21
13
L3
L2
L1
BL
BL
GY
Y
R
40 VA
WH
24 VAC
BR
XFMR
WH
NC
C
O-L/S
NO
OR
OR
NC
NO
C-L/S
C
GY
GY
GN
WH
WH
BK
HIGH VOLTAGE
WH
BK
BK
BK
L1
L2
L3
GRD
INCOMING
LINE
SINGLE
CONTACT
CONTROL
COM
SINGLE
SENSING
EDGE OR
PHOTOCELL
COM
N.O. REV
N.C.
SENSING
DEVICE
COM
N.C. REV
REMOVE VIOLET
JUMPER BETWEEN
THESE TERMINALS
WH
R
BR
R3
R2
R1
RADIO
RCVR
COM
VAC
LOCK
SINGLE
COM
PHOTO
NC
REV
NO REV
COM
STOP
CLOSE
OPEN
V
BR
BR
WH
R
V
WH
V
V
C
NC
NO
INTERNAL INTERLOCK
WHEN REQUIRED
(BREAKS CIRCUIT
WHEN ACTIVATED)
NOTE: ADD JUMPER TO COM AND STOP
TERMINALS IF NO STOP BUTTON IS USED.
OPEN
CLOSE
STOP
EXTERNAL INTERLOCK
(WHEN REQUIRED)
WIRED FOR
V, 1ø
PowerMaster
FOR USE WITH: COMMERCIAL DOOR OPERATORS W/
CDOMCB BOARD &CONTACTOR W/CAP START MOTOR
DATE: 6/29/06
REV. 2
BY: F.S.
DOOR OPERATORS
CONTROL WIRING DIAGRAM
WIRING DIAGRAM 6501
© Copyright PowerMaster 2006
No portion of this diagram may be reproduced without the
expressed written permission of the manufacturer.