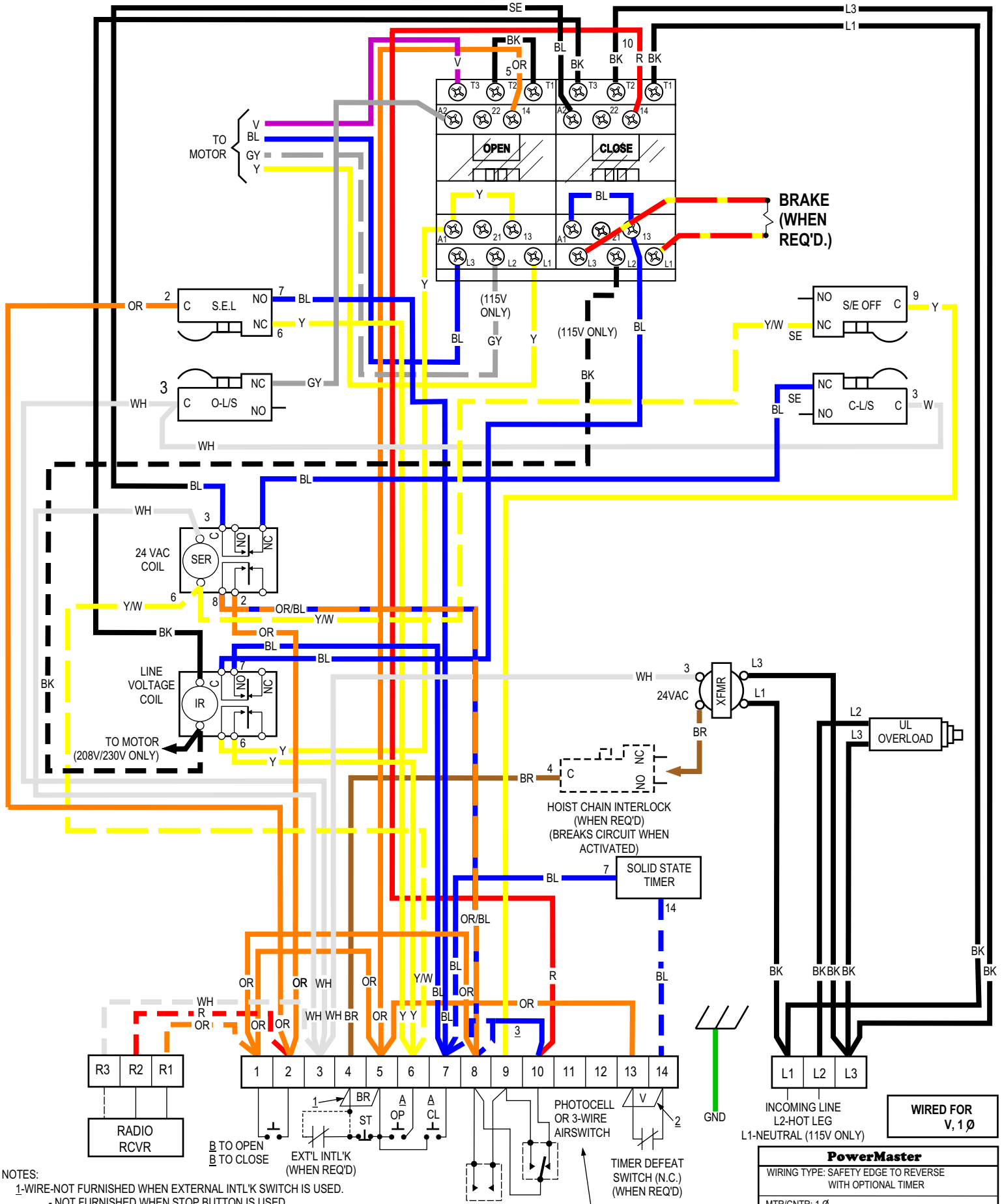


NOTES:

1-WIRE-NOT FURNISHED WHEN EXTERNAL INTL'K SWITCH IS USED.
- NOT FURNISHED WHEN STOP BUTTON IS USED.

2- WIRE-NOT FURNISHED WHEN TIMER DEFEAT SWITCH IS USED.

3a- MOVE THIS JUMPER FROM #7 TO #8 IF ALL OBSTRUCTIONS SENSORS ARE 2-WIRE TYPE.

3b-REMOVE JUMPER IF ANY 3-WIRE DEVICES ARE USED.

A-TREADLES,PULL SWITCHES, KEY SWITCHES, PHOTO-ELECTRIC DEVICES, ETC. MAY BE CONNECTED TO TERMINALS INDICATED.

B-REMOTE CONTROL UNITS (EXCLUDING TREADLES AND PHOTO-ELECTRIC UNITS). PULL SWITCHES AND SINGLE CONTACT CONTROL STATIONS, MAY BE CONNECTED TO TERMINALS INDICATED.

**PowerMaster**

WIRING TYPE: SAFETY EDGE TO REVERSE WITH OPTIONAL TIMER

MTR/CNTR: 1 Ø

DATE: 10-31-02 REV. 16

BY: F.S.

SPECIAL: OPTIONAL TIMER CIRCUIT IN DASHED LINES

WIRING DIAGRAM NO. 331-3