QUICKSTART "BASIC" GUIDELINES FOR MODEL 6300 - FOR GATES UP TO 18 FEET AND OPENING 90°

Model 6300 is intended for installation only on swing gates used for vehicles.
Pedestrians must be supplied with a separate access opening.

For safety and installation instructions, please refer to the owner's manual.

DOORKING®, INC.™
120 Glasgow Avenue
Inglewood, California 90301
U.S.A.

Operator Position

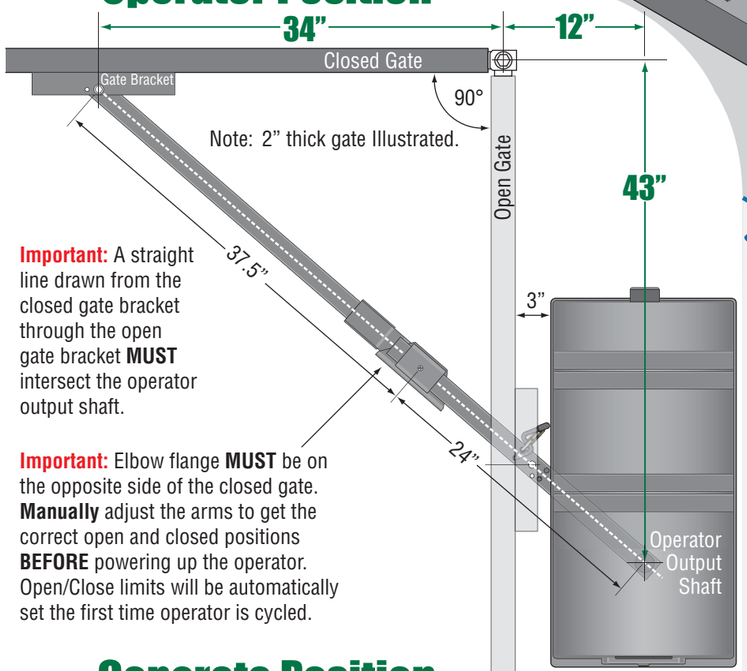

Important: A straight line drawn from the closed gate bracket through the open gate bracket **MUST** intersect the operator output shaft.

Important: Elbow flange **MUST** be on the opposite side of the closed gate. **Manually** adjust the arms to get the correct open and closed positions **BEFORE** powering up the operator. Open/Close limits will be automatically set the first time operator is cycled.

Concrete Position

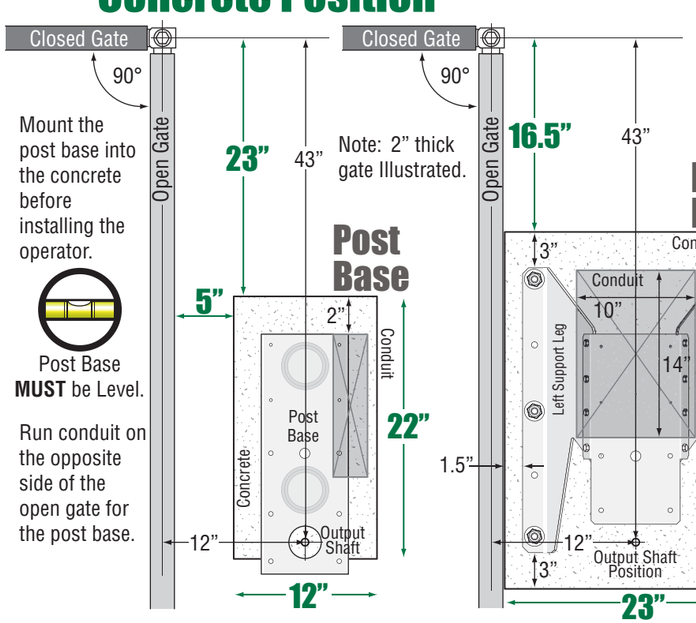

Mount the post base into the concrete before installing the operator.

Post Base **MUST** be Level.

Run conduit on the opposite side of the open gate for the post base.

Pad **MUST** be Level.

Secure operator to the concrete pad with six (6) 3/8" x 3" sleeve anchors (not supplied).

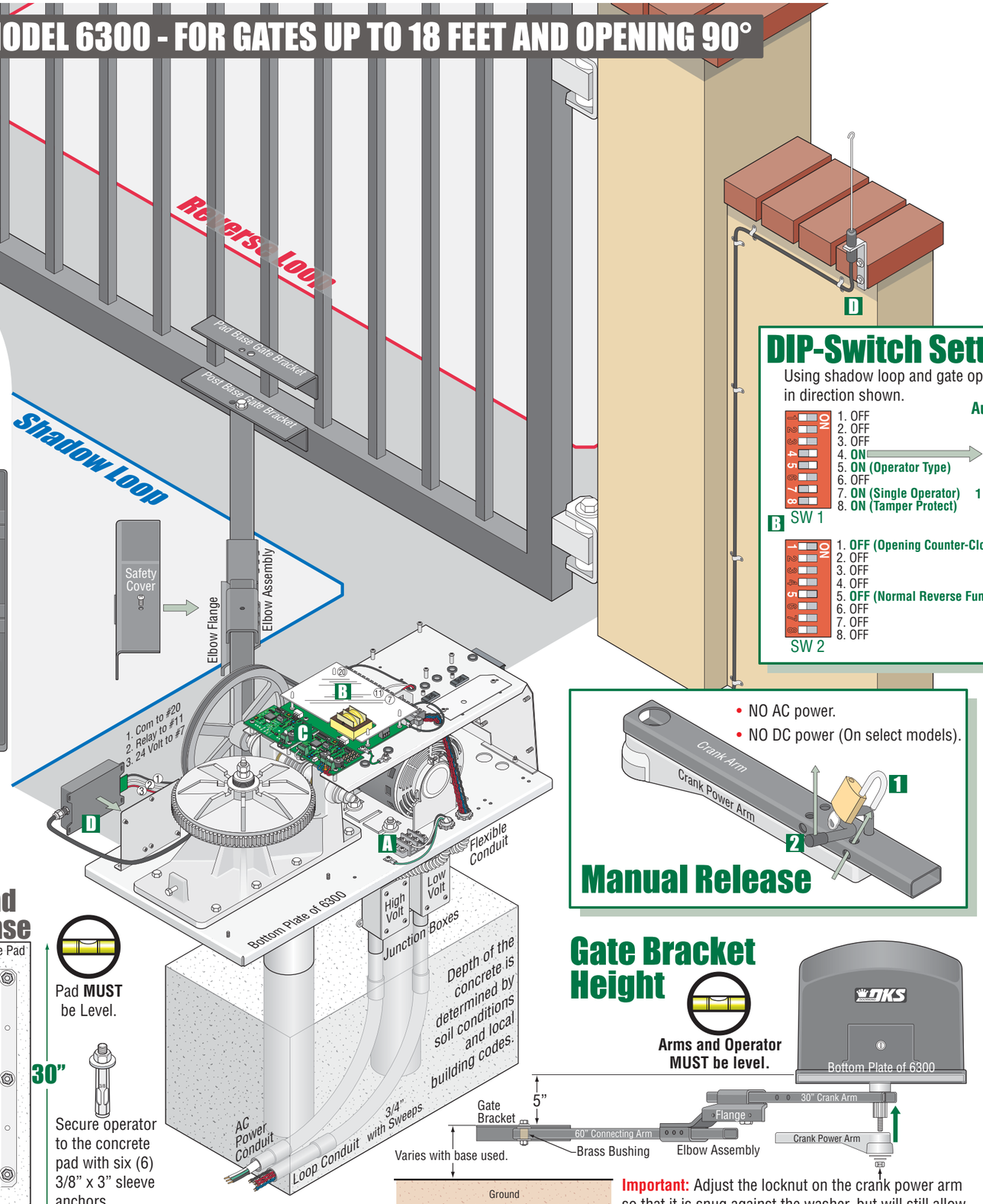

Copyright 2010 DoorKing, Inc. All rights reserved.

DIP-Switch Settings

Using shadow loop and gate opening in direction shown.

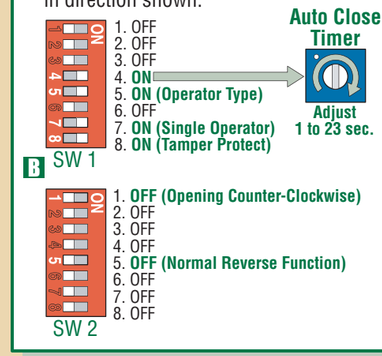

Manual Release

- NO AC power.
- NO DC power (On select models).

Gate Bracket Height

Arms and Operator MUST be level.

Important: Adjust the locknut on the crank power arm so that it is snug against the washer, but will still allow the 30" crank arm to rotate with little force.

High Voltage Connection

GATE OPERATOR MUST BE PROPERLY GROUNDED!!

Tip: It is recommended that a surge suppressor be installed on the high voltage power lines.

DANGER
HIGH VOLTAGE!

115 VAC

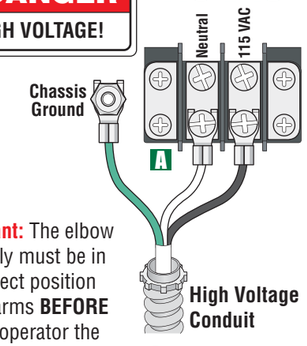

Important: The elbow assembly must be in the correct position on the arms **BEFORE** cycling operator the first time.

OR

230 VAC/460 VAC

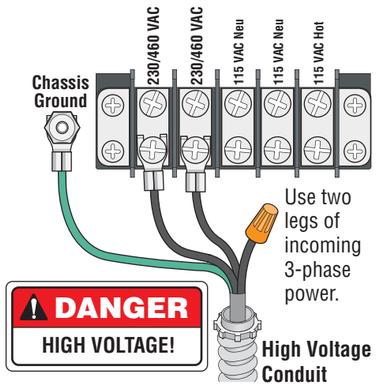

DANGER
HIGH VOLTAGE!

Loop Detectors

C Not included - Refer to the Owner's manual and Loop Information Manual (available from www.dkaccess.com) for more information on loops and loop detectors.

Radio Receiver

D Not included - Refer to a specific Radio Receiver Manual (available from www.dkaccess.com) for more information on radio receivers and antenna installation.

6300-066-F-4-10